City of Las Cruces®

PEOPLE HELPING PEOPLE

Council Action and Executive Summary

Item # 7 **Ordinance/Resolution#** 2544 **Council District:** 2

For Meeting of October 26, 2009
(Adoption Date)

TITLE: AN ORDINANCE APPROVING A ZONE CHANGE FROM C-2 (COMMERCIAL MEDIUM INTENSITY) TO C-3 (COMMERCIAL HIGH INTENSITY) FOR 4.31 ± ACRES LOCATED AT 1400 EAST MISSOURI AVENUE. THE ZONE CHANGE WILL BRING THE PROPERTY INTO ZONING COMPLIANCE, BASED ON THE OVERALL SIZE OF THE PROPERTY EXCEEDING THE ONE ACRE MAXIMUM LOT SIZE FOR PROPERTIES WITHIN THE C-2 (COMMERCIAL MEDIUM INTENSITY) ZONING DISTRICT. SUBMITTED BY CITY AND REGIONAL LAND USE CONSULTANTS FOR GADCO OF EL PASO, LLC (Z2793).

PURPOSE(S) OF ACTION: Approval of a zone change that will bring the existing shopping center into compliance with the 2001 Zoning Code, as amended.

Name of Drafter: Cheryl Rodriguez CR		**Department:** Community Development		**Phone:** 528-3207	
Department	**Signature**	**Phone**	**Department**	**Signature**	**Phone**
Community Development	DW	528-3066	Budget		541-2107
			Assistant City Manager		541-2271
Legal		541-2128	City Manager		541-2076

BACKGROUND / KEY ISSUES / CONTRIBUTING FACTORS:

The property owner, GADCO of EL Paso, LLC, is requesting a zone change from C-2 (Commercial Medium Intensity) to C-3 (Commercial High Intensity) for 4.31 ± acres of property located at 1400 East Missouri Avenue. The subject property contains a shopping center occupied by a grocery store, bicycle store, two restaurants, a cosmetology school, tavern, and an ice cream shop. The grocery store is currently undergoing an internal renovation. The internal renovation triggered the need for the subject property to come into compliance with the 2001 Zoning Code, as amended. As the subject property exceeds the maximum lot size requirement of one-acre for the C-2 (Commercial Medium Intensity) zoning district, the applicant is seeking a zone change request to C-3 (Commercial High Intensity) to bring the subject property into compliance with the 2001 Zoning Code, as amended.

The shopping center and ancillary buildings were constructed in 1965 and have a combined gross floor area (GFA) of 45,000 ± square feet. The subject property is located at the southeastern intersection of South Solano Drive and Missouri Avenue. The Metropolitan Planning Organization (MPO) has classified South Solano Drive and Missouri Avenue as Principal Arterial roadways. The property also has access from Luna Street classified as a Local roadway. The portion of Luna Street located south of Missouri Avenue terminates at the southern boundary of the shopping center. A bicycle lane is located on the western side of

South Solano Drive from Lohman Avenue to Missouri Avenue. A bus shelter is located on the northern side of Missouri Avenue in close proximity to the intersection of South Solano Drive and Missouri Avenue. There are no trails present within the general area.

The 2001 Zoning Code, as amended, requires shopping centers exceeding 15,000 square feet to provide one parking stall per 200-300 square feet of GFA. Based on the GFA of the shopping center, a range of 150 to 225 parking spaces are required. The subject property is in compliance with the parking requirements set forth in the 2001 Zoning Code, as amended.

The City of Las Cruces Design Standards requires additions or structural modifications to existing buildings with a value of $25,000.00 or over to provide landscaping. The parking area determines the amount of landscaping required for the site. A minimum area equal to 15 percent of the total parking area shall be landscaped. For the purpose of landscaping compliance, the parking area includes the entire tract of land except for the building pad and fenced-in storage area. The subject property has mature landscaping including trees in excess of twenty feet in height. The property has ground cover (i.e. grass) along the entire frontage of Missouri Avenue and South Solano Drive. The property also has landscaped islands distributed throughout the parking lot. The subject property is in compliance with the minimum landscaping requirements set forth in the City of Las Cruces Design Standards.

The 2001 Zoning Code, as amended, identifies the requirement for separation distances and landscaping screens between zoning districts and/or land uses. The property is bordered to the north and west by two major thoroughfares (Missouri Avenue & South Solano Drive) and to the east by Luna Drive, a minor local roadway. Separation distance and landscaping screens are not required adjacent to these boundaries. The subject property is bordered to the south by one residentially zoned property and a commercially zoned mini-storage business. A landscaping screen is required adjacent to the residential property. Currently an opaque cinder block wall of an approximate height of five (5) feet is located on the northern boundary of the residential property. The shopping center's loading area, i.e., an alley, is located adjacent to the residential home providing an additional distance separation between the residential home and the shopping center. The subject property is in compliance with the separation distance and landscaping screen requirements set forth in the 2001 Zoning Code, as amended.

On July 28, 2009, the Planning and Zoning Commission (P&Z) recommended approval without conditions for the zone change by a vote of 4-0-0 (three Commissioners absent). No public comment was received during the P&Z hearing regarding this case. To date no comments have been received from the surrounding property owners.

SUPPORT INFORMATION:

Fund Name / Account Number	Amount of Expenditure	Budget Amount
N/A	N/A	N/A

1. Ordinance
2. Exhibit "A"- Metes and Bounds Description of Property
3. Exhibit "B"- Findings and Comprehensive Plan Analysis
4. Attachment "A"- Staff Report to the Planning and Zoning Commission for Case Z2793
5. Attachment "B"- Minutes from the July 28, 2009 Planning and Zoning Commission
6. Attachment "C"- Vicinity Map

OPTIONS / ALTERNATIVES:

1. Vote YES to approve the Ordinance. This action affirms the Planning and Zoning Commission recommendation for approval. The property located at 1400 East Missouri Avenue will be rezoned from C-2 (Commercial Medium Intensity) to C-3 (Commercial High Intensity).

2. Vote NO to deny the Ordinance. This action reverses the recommendation made by the Planning and Zoning Commission. The current zoning designation of C-2 (Commercial Medium Intensity) will remain on the property located at 1400 East Missouri Avenue. The property will be allowed to continue to operate as shopping center having a non-conforming land use status.

3. Modify the Ordinance and vote YES to approve the modified Ordinance. The Council may modify the Ordinance by adding conditions as deemed appropriate.

4. Table/Postpone the Ordinance and direct staff accordingly.

COUNCIL BILL NO. 10--015
ORDINANCE NO. 2544

AN ORDINANCE APPROVING A ZONE CHANGE FROM C-2 (COMMERCIAL MEDIUM INTENSITY) TO C-3 (COMMERCIAL HIGH INTENSITY) FOR 4.31 ± ACRES LOCATED AT 1400 EAST MISSOURI AVENUE. THE ZONE CHANGE WILL BRING THE PROPERTY INTO ZONING COMPLIANCE, BASED ON THE OVERALL SIZE OF THE PROPERTY EXCEEDING THE ONE ACRE MAXIMUM LOT SIZE FOR PROPERTIES WITHIN THE C-2 (COMMERCIAL MEDIUM INTENSITY) ZONING DISTRICT. SUBMITTED BY CITY AND REGIONAL LAND USE CONSULTANTS FOR GADCO OF EL PASO, LLC (Z2793).

The City Council is informed that:

WHEREAS, GADCO of El Paso, LLC, the property owner, has submitted a request for a zone change from C-2 (Commercial Medium Intensity) to C-3 (Commercial High Intensity) for 4.31 ± acres located at 1400 East Missouri Avenue; and

WHEREAS, the Planning and Zoning Commission, after conducting a public hearing on July 28, 2009, recommended that said zone change request be approved by a vote of 4-0-0 (three Commissioners absent).

NOW THEREFORE, Be it ordained by the governing body of the City of Las Cruces:

(I)

THAT the land more particularly described in Exhibit "A," attached hereto and made part of this Ordinance, is hereby zoned C-3 (Commercial High Intensity) for the property located at 1400 East Missouri Avenue.

(II)

THAT the zoning is based on the findings contained in Exhibit "B" (Findings and Comprehensive Plan Analysis), attached hereto and made part of this Ordinance.

(III)

THAT the zoning of said properties be shown accordingly on the City Zoning Atlas.

(IV)

THAT City staff is hereby authorized to do all deeds necessary in the accomplishment of the herein above.

DONE AND APPROVED this_____ day of _____ 2009.

APPROVED:

(SEAL)

_____
Mayor

ATTEST:

_____
City Clerk

VOTE:
Mayor Miyagishima: ____
Councillor Silva: ____
Councillor Connor: ____
Councillor Archuleta: ____
Councillor Small: ____
Councillor Jones: ____
Councillor Thomas: ____

Moved by: _____

Seconded by: _____

APPROVED AS TO FORM:

_____
City Attorney

Exhibit "A"

555

SOLANO SQUARE

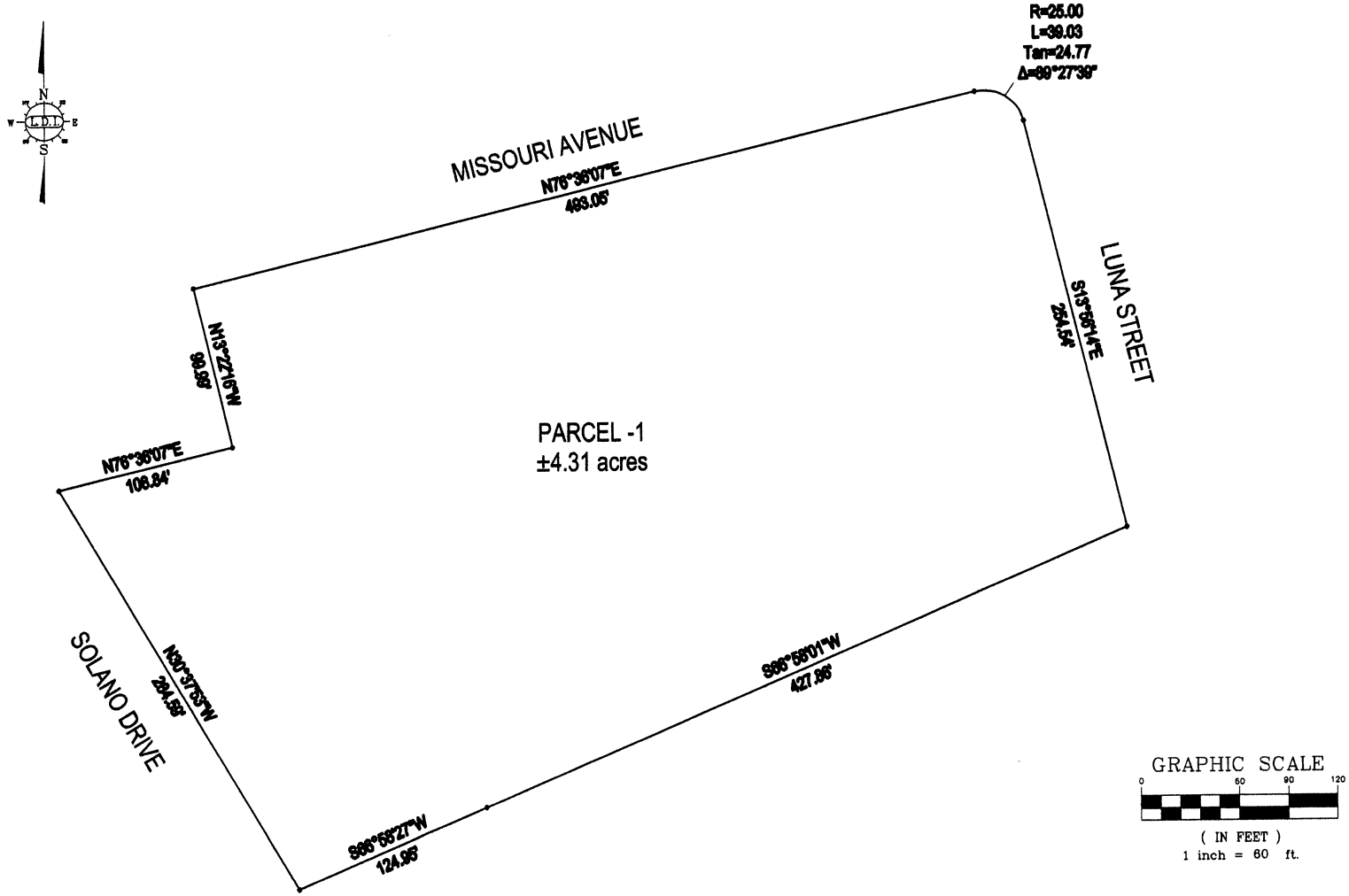

EXHIBIT "B"
FINDINGS AND COMPREHENSIVE PLAN ANALYSIS

1. The subject property is 4.31 +/- acres located at 1400 E. Missouri Avenue.

2. The subject property is in compliance with landscaping and parking requirements of the 2001 Zoning Code, as amended.

3. The zone change request from C-2 (Commercial Medium Intensity) to C-3 (Commercial High Intensity) is based on the property exceeding the maximum threshold of one (1) acre for properties zoned C-2 (Commercial Medium Intensity).

4. The shopping center was constructed in 1965 having a combined gross floor area of 45,000 +/- square feet.

5. The Metropolitan Planning Organization (MPO) has classified S. Solano Drive and Missouri Avenue as Principal Arterial roadways.

6. To date no comments have been received from surrounding property owners.

7. Adjacent land use and zoning include:

	Zoning	Land Use
North	C-1/R-4/R-1a	Professional office/ single family residence
South	R-1a/C-2c	Single-family residence/mini storage units
East	C-2/R-3	Professional office/apartments
West	O-1	Professional offices/apartments

8. The request is consistent with the following sections of the City of Las Cruces Comprehensive Plan:

Land Use Element, Goal 1 (Land Uses)

Policy 5.3 High intensity commercial use shall be defined as those commercial uses which generate retail, service, and wholesale activities within a specific sector within the City. High intensity commercial use and centers shall generally serve a population of 15,000 to 85,000 people and shall be established according to the following criteria:

a. Generally 5,000 but not to exceed 75,000 gross square feet shall be permitted for a high intensity commercial use, with generally 200,000 square feet permitted for a high intensity commercial center.

A high intensity commercial center becomes a regional commercial use when the center contains one anchor store greater than 75,000 gross square feet.

b. High intensity commercial uses and centers shall be located at the intersection of minor arterial streets, or any intersection with a major arterial street. Mid-block locations shall be considered on a case-by-case basis: criteria shall include street capacity, distance from an intersection where appropriate, accessibility and shared vehicular access with other uses where appropriate, and consideration of the level of traffic and environmental impacts.

d. High intensity commercial development shall address the following urban design criteria: compatibility to adjacent development in terms of architectural design, height/density, and the provision of landscaping for site screening, parking, and loading areas. Architectural and landscaping standards for high intensity commercial use shall be established in the Comprehensive Plan Urban Design Element.

g. High intensity commercial use and centers should not locate adjacent to rural or low density residential uses.

h. Low and medium intensity commercial use are permitted in high intensity commercial areas.

Attachment "H"

City of Las Cruces®

TO: Planning and Zoning Commission

PREPARED BY: James A. White, AICP, Planner JW

DATE: July 28, 2009

SUBJECT: 1400 E. Missouri Avenue (Zone Change)

RECOMMENDATION: Approval – without conditions for zone change (Case Z2793)

Case Z2793: A request for a zone change from C-2 (Commercial Medium Intensity) to C-3 (Commercial High Intensity) for 4.31 +/- acres located at 1400 E. Missouri Avenue. The subject property is a shopping center (Solano Square) having multiple tenants. The zone change will bring the property into compliance with the 2001 Zoning Code, as amended for commercial properties exceeding the maximum acreage of one (1) acre for properties zoned C-2 (Commercial Medium Intensity). Submitted by City and Regional Land Use Consultants for GADCO of El Paso, LLC.

BACKGROUND

The applicant, GADCO of El Paso, LLC, is requesting a zone change from C-2 (Commercial Medium Intensity) to C-3 (Commercial High Intensity) for property located at 1400 E. Missouri Avenue. The property is currently a shopping center consisting of 4.31 +/- acres occupied by a grocery store, bicycle store, two restaurants, a cosmetology school, a tavern and an ice cream shop. The grocery store is proceeding with an internal renovation. The internal renovation of the grocery store requires for the property to become into compliance with the 2001 Zoning Code, as amended. The zone change request is based on the total area of the subject property exceeding the maximum threshold of one (1) acre for properties zoned C-2 (Commercial Medium Intensity). The applicant's zone change will bring the property into compliance with the 2001 Zoning Code, as amended.

The shopping center and ancillary building were constructed in 1965 and have combined gross floor area of 45,000 +/- square feet. The subject property is located at the southeastern intersection of S. Solano Drive and Missouri Avenue. The Metropolitan Planning Organization (MPO) has classified S. Solano Drive and Missouri Avenue as Principal Arterial roadways. The property also has access from Luna Street classified as a Local roadway. The portion of Luna Street located south of Missouri Avenue terminates at the southern boundary of the shopping center. A bicycle lane is located on the western side of S. Solano Drive from Lohman Avenue to Missouri Avenue. A bus shelter is located on the northern side of Missouri Avenue in close proximity to the intersection of S. Solano Drive and Missouri Avenue. There are no trails present within the general area.

PARKING

The property contains 90,465 square feet or 2.07 acres of improved parking. The 2001 Zoning Code, as amended requires shopping centers exceeding 15,000 square feet to provide one (1) parking stall per 200-300 square feet of gross floor area. Therefore, based on the gross floor area of the shopping center a range of 150 to 225 parking spaces are required. The property is in compliance with the parking requirements of the 2001 Zoning Code, as amended.

LANDSCAPING AND SCREENING

The City of Las Cruces Design Standards requires additions or structural modifications to existing buildings with a value of $25,000.00 or over to provide landscaping. The parking area will determine the amount of landscaping required for the site. A minimum area equal to 15 percent of the total parking area shall be landscaped. For the purpose of landscaping compliance, the parking area includes the entire tract of land except for the building pad and fenced-in storage area.

The subject property has mature landscaping including trees in excess of twenty feet in height. The property has ground cover (i.e. grass) along the entire frontage of Missouri Avenue and S. Solano Drive. The property also has landscape islands distributed throughout the parking lot. The subject property is in compliance with the required 15% landscaping required on the subject property.

The property is bordered to the north and west by two major thoroughfares (Missouri Avenue & S. Solano Drive respectively) and to the east by Luna Drive (Local). Therefore, additional buffering (screening) is not required adjacent to these boundaries. The property is bordered to the south by one (1) residential zoned property and a commercially zoned mini-storage business. Buffering (screening) is only required adjacent to the residential property. Currently an opaque cinder block wall having an approximate height of five (5) feet is located on the northern boundary of the residential property. The shopping center's loading area (i.e. alley) is located adjacent to the residential home providing an additional buffer yard between the residential home and the shopping center. Additional screening is not required.

To date no comments have been received from surrounding property owners.

FINDINGS

1. The subject property is 4.31 +/- acres located at 1400 E. Missouri Avenue.

2. The subject property is in compliance with landscaping and parking requirements of the 2001 Zoning Code, as amended.

3. The zone change request from C-2 (Commercial Medium Intensity) to C-3 (Commercial High Intensity) is based on the property exceeding the maximum threshold of one (1) acre for properties zoned C-2 (Commercial Medium Intensity).

4. The shopping center was constructed in 1965 having a combined gross floor area of 45,000 +/- square feet.

5. The Metropolitan Planning Organization (MPO) has classified S. Solano Drive and Missouri Avenue as Principal Arterial roadways.

6. To date no comments have been received from surrounding property owners.

7. Adjacent land use and zoning include:

	Zoning	Land Use
North	C-1/R-4/R-1a	Professional office/ single family residence
South	R-1a/C-2c	Single-family residence/mini storage units
East	C-2/R-3	Professional office/apartments
West	O-1	Professional offices/apartments

8. The request is consistent with the following sections of the City of Las Cruces Comprehensive Plan:

Land Use Element, Goal 1 (Land Uses)

Policy 5.3 High intensity commercial use shall be defined as those commercial uses which generate retail, service, and wholesale activities within a specific sector within the City. High intensity commercial use and centers shall generally serve a population of 15,000 to 85,000 people and shall be established according to the following criteria:

a. Generally 5,000 but not to exceed 75,000 gross square feet shall be permitted for a high intensity commercial use, with generally 200,000 square feet permitted for a high intensity commercial center. A high intensity commercial center becomes a regional commercial use when the center contains one anchor store greater than 75,000 gross square feet.

b. High intensity commercial uses and centers shall be located at the intersection of minor arterial streets, or any intersection with a major arterial street. Mid-block locations shall be considered on a case-by-case basis: criteria shall include street capacity, distance from an intersection where appropriate, accessibility and shared vehicular access with other uses where appropriate, and consideration of the level of traffic and environmental impacts.

d. High intensity commercial development shall address the following urban design criteria: compatibility to adjacent development in terms of architectural design, height/density, and the provision of landscaping for site screening, parking, and loading areas. Architectural and landscaping standards for high intensity commercial use shall be established in the Comprehensive Plan Urban Design Element.

g. High intensity commercial use and centers should not locate adjacent to rural or low density residential uses.

h. Low and medium intensity commercial use are permitted in high intensity commercial areas.

Staff has reviewed this zone change and recommends approval without conditions, based on the preceding findings

RECOMMENDATION

The recommendation of the Planning and Zoning Commission will be forwarded to City Council for final consideration.

OPTIONS

1. Approve the request as recommended by staff for case Z2793.
2. Approve the request with additional conditions.
3. Deny the request.

ATTACHMENTS

1. Development Statement
2. Agent's narrative
3. Site plan *internal remodel
4. Vicinity Map

DEVELOPMENT STATEMENT **for Zoning Applications**
(Use for Zone Changes, SUP's and PUD's)
Please type or print legibly

Please note: The following information is provided by the applicant for information purposes only. The applicant is not bound to the details contained in the development statement, nor is the City responsible for requiring the applicant to abide by the statement. The Planning and Zoning Commission or City Council may condition approval of the proposal at a public hearing where the public will be provided an opportunity to comment.

Applicant Information

Name of Applicant: GADCO OF EL PASO LLC

Contact Person: KIRK CLIFTON - CITY AND REGIONAL LAND USE CONSULTANTS

Contact Phone Number: _____

Contact e-mail Address: kirkclifton@gmail.com

Web site address (if applicable): _____

Proposal Information

Location of Subject Property 1400 E. MISSOURI AVE. / SE CORNER MISSOURI & SOLAND

(In addition to description, attach map. Map must be at least 8 ½" x 11" in size and clearly show the relation of the subject property to the surrounding area)

Current Zoning of Property: C-2

Proposed Zoning: C-3

Acreage of Subject Property: 4.31± ACRES

Detailed description of intended use of property. (Use separate sheet if necessary):

EXISTING USE OF PROPERTY HAS BEEN AND CONTINUES TO BE A SHOPPING CENTER. NO CHANGE IN LAND USE OR EXPANSION OF USE. APPLICANT HAS BUILDING PERMIT UNDER REVIEW AND STAFF REQUESTED PROPERTY BE BROUGHT INTO COMPLIANCE

Proposed square footage and height of structures to be built (if applicable):

EXISTING STRUCTURE - APPROXIMATELY (BUILT ± 1965)

Anticipated hours of operation (if proposal involves non-residential uses):

NO CHANGE IN OPERATIONAL TIMES

Anticipated traffic generation 2000-2500 ± / DAY trips per day (if known).

NO CHANGE IN LAND-USE - TRAFFIC GENERATION REMAINS THE SAME

Anticipated development schedule: Work will commence on or about N/A - EXISTING SHOPPING CENTER

and will take approximately _____ to complete.

How will stormwater runoff be addressed (on-lot ponding, detention facility, etc.)?

ON-LOT PONDING (EXISTING PER C.L.C. DESIGN STANDARDS)

Will any special landscaping, architectural or site design features be implemented in the proposal (for example, rock walls, landscaped medians or entryways, or architectural themes)? If so, please describe and attach rendering if available:

EXISTING LANDSCAPING AND SITE DESIGN FEATURES AS SEEN ON-SITE.

Attachments

Please attach the following: (* *indicates optional item*)

Location map

Detailed site plan

Proposed building elevations*

Renderings or architectural or site design features*

Other pertinent information*

CITY AND REGIONAL
APA AICP
LAND USE CONSULTANTS
MASTER PLANNING, URBAN DESIGN, SMART GROWTH,
PROJECT MANAGEMENT, & GOVERNMENT AFFAIRS

April 29, 2009

Mr. James White, AICP
City Zoning Administrator
City of Las Cruces Community Development Department
P.O. Box 20000
Las Cruces, NM 88004

RE: Zone Change Request – 1400 E. Missouri Ave., "Solano Square Shopping Center"

Mr. White,

Attached you will find a complete zone change application for property located at 1400 E. Missouri Avenue. The property is currently zoned C-2 and the request is to change it to C-3. The applicant presently has a building permit under review for a commercial remodel of a portion of the existing shopping center. Apparently, City review staff has requested the property be brought into compliance with the 2001 Las Cruces Zoning Code, as amended. Under the present zoning code, the C-2 zoning district allows for a maximum lot size of 1 acre. The existing shopping center is located on approximately 4.31 acres of land. The C-3 zoning designation would permit this lot size for the existing land use. As a point of interest, this shopping center has been at this location since approximately 1965.

Please note that the applicant for this case is "GADCO of El Paso, LLC". I have been retained to assist the applicant with this zone change process. City Building Inspection staff has stated that once this application has been submitted, they will release the building permit. If you should have any questions or need additional information, please feel free to contact me at 571-2464. I look forward to working with you on this project.

Sincerely,

Kirk M. Clifton

Kirk M. Clifton, AICP
President, City and Regional Land Use Consultants

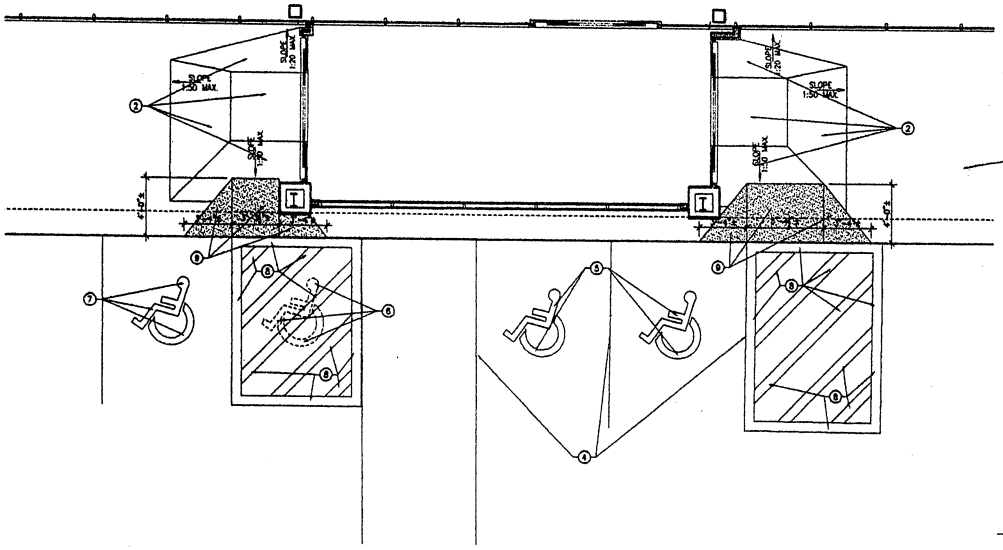

26 DETAIL SITE PLAN
SCALE: 1/4"=1'-0"

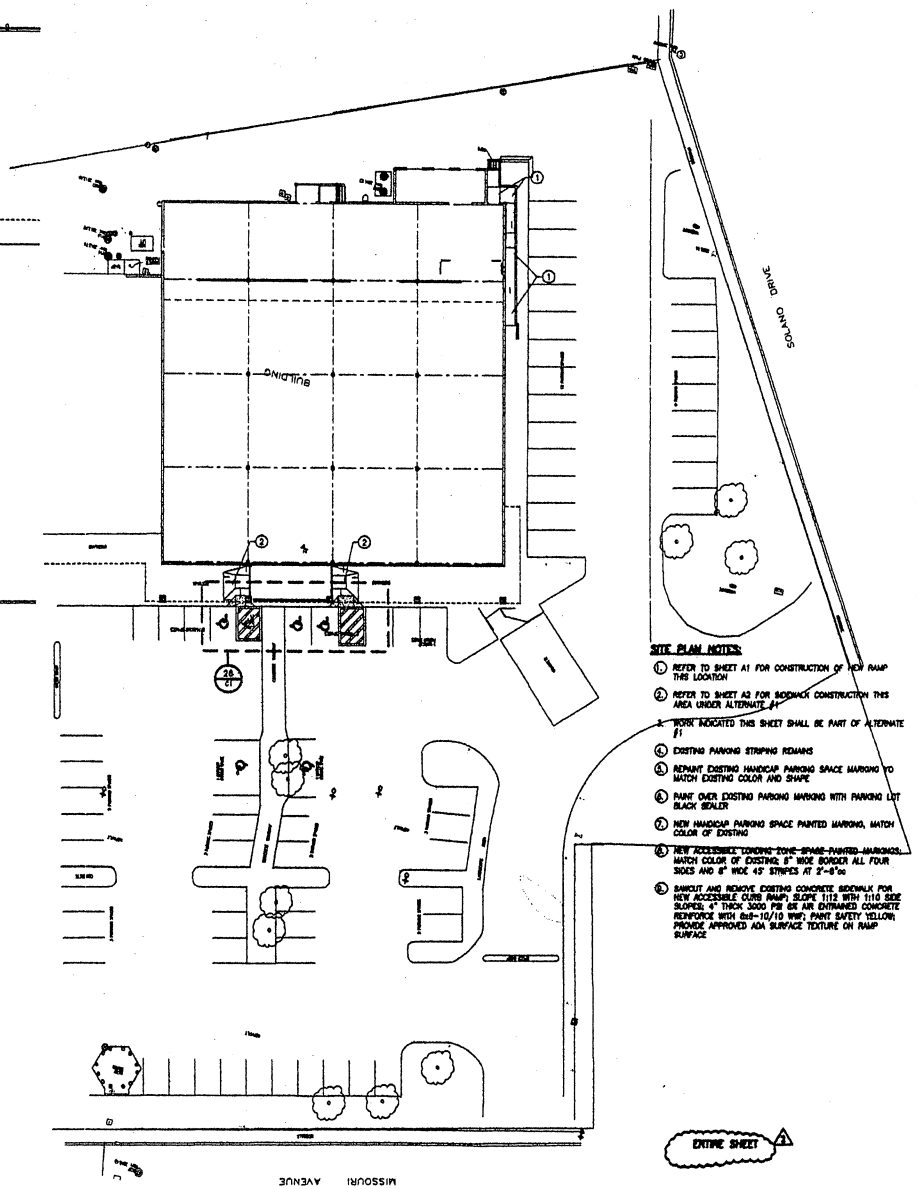

SITE PLAN
SCALE: 1"=20'-0"

SITE PLAN NOTES:

1. REFER TO SHEET A1 FOR CONSTRUCTION OF NEW RAMP THIS LOCATION
2. REFER TO SHEET A2 FOR SIDEWALK CONSTRUCTION THIS AREA UNDER ALTERNATE #1
3. WORK INDICATED THIS SHEET SHALL BE PART OF ALTERNATE #1
4. EXISTING PARKING STRIPING REMAINS
5. REPAINT EXISTING HANDICAP PARKING SPACE MARKING TO MATCH EXISTING COLOR AND SHAPE
6. PAINT OVER EXISTING PARKING MARKING WITH PARKING LOT BLACK SEALER
7. NEW HANDICAP PARKING SPACE PAINTED MARKING, MATCH COLOR OF EXISTING
8. NEW ACCESSIBLE LOADING ZONE SPACE PAINTED MARKINGS, MATCH COLOR OF EXISTING; 6" WIDE BORDER ALL FOUR SIDES AND 6" WIDE 45° STRIPES AT 2'-6"oc
9. SAWCUT AND REMOVE EXISTING CONCRETE SIDEWALK FOR NEW ACCESSIBLE CURB RAMP; SLOPE 1:12 WITH 1:10 SIDE SLOPES; 4" THICK 3000 PSI 6% AIR ENTRAINED CONCRETE REINFORCE WITH 6x6-10/10 WWF; PAINT SAFETY YELLOW; PROVIDE APPROVED ADA SURFACE TEXTURE ON RAMP SURFACE

*INTERNAL REMODEL

STATE OF NEW MEXICO
LICENSED ARCHITECT
JOHNNY R. ARMENTA
No. 4000

RICAL
P.O. BOX 64448, LUBBOCK, TEXAS 79463
PH. 806.746.6067
e-mail: dave@ricarchitecture.com or ric@ricarchitecture.com

LOWE'S #58
2006/ INTERIOR REMODEL - ANTY
FOYER ADDITION
LAS CRUCES, NEW MEXICO
1410 EAST MISSOURI
PH.: 505-522-0794

JOB NO. 1007-2006
DATE: 02-20-2009
REVISIONS

SHEET
C1
PAGE 3 OF 13

565

Attachment "B"

MEETING OF PLANNING AND ZONING COMMISSION
FOR THE
CITY OF LAS CRUCES
City Council Chambers
July 28, 2009 at 6:00 p.m.

BOARD MEMBERS PRESENT:
Godfrey Crane, Vice Chair
Donald Bustos, Secretary
Charles Beard, Member
Ray Shipley, Member

BOARD MEMBERS ABSENT:
Charles Scholz, Chairman
Shawn Evans, Member
Clayton Iserman, Member

STAFF PRESENT:
Cheryl Rodriguez, Development Services Administrator
Gary Hembree, Senior Planner
James White, Planner
Adam Ochoa, Associate Planner
Helen Revels, Associate Planner
David Dollahon, Neighborhood Services Administrator
Jennifer Robertson, Planner
Robert Gonzales, Las Cruces Fire
Jared Abrams, CLC Legal Staff
Becky Eich, Recording Secretary

I. CALL TO ORDER 6:00

Crane: Good evening, ladies and gentlemen. This is Tuesday, the 28th of July and this is the call to order of the Planning and Zoning Commission meeting. Let me start by introducing the members as we usually do. On my far right, Commissioner Shipley, he is the Mayor's representative. Then Commissioner Bustos, representing district 3. Commissioner Beard, district 2. My name's Crane, I'm the Vice Chair and tonight I'm substituting for Charlie Scholz, our usual Chair who can't be with us. And I represent district 4.

II. APPROVAL OF MINUTES - June 30, 2009

Crane: The first thing on our agenda is to have comments on and approval of the minutes of the last meeting. Commissioners, anybody have any points to make about that? Then the Chair will entertain a motion the minutes be accepted.

Beard: So second.

Crane: Is there a second?

Bustos: Second

Crane: All in favor, aye.

ALL COMMISSIONERS - AYE.

Crane: Opposed nay. Minutes are accepted four to nothing.

III. POSTPONEMENTS

1. **Case SNC-09-01:** A City of Las Cruces initiated street name change from Del Rey Boulevard to Check Court for a 910 +/- foot section of roadway that runs east-west and from Del Rey Boulevard to Weaver Trail for 1,575 +/- foot section of roadway that runs north-south between Check Court and Tucson Avenue. The realignment of Del Rey Boulevard has initiated the street name changes. Submitted by the City of Las Cruces.
POSTPONED TO AUGUST 25, 2009

Crane: We have one postponement on the docket, Case SNC-09-01 and I heard a hint that there was another one, Mr. White.

White: For the record James White Community Development Department. The applicant in request to Case Z2786 has requested a postponement, date certain to 08/25/2009.

Crane: What was the date again?

White: August 25th, 2009.

Crane: Thank you.

IV. WITHDRAWALS

1. **Case A1693:** A request for a variance from the type of freestanding signage allowed in the Lohman Avenue Overlay District (LAO). The subject property is located at 115 Roadrunner Parkway and is subject to the LAO guidelines. In the LAO a ground sign is the only type of freestanding sign allowed with a maximum height of seven feet. The applicant would like to stall an elevated pole sign with a minimum height of 10 feet. The proposed sign will be a minimum of three feet taller than the allowed maximum height of seven feet. The subject property is zoned C-3C (Commercial High Intensity-Conditional)

and encompasses +/- 1.72 acres. Submitted by Carrie Swartz. Swartz Investment Group LLC on behalf of property owner Gary Anderson.

Crane: We also have a withdrawal, Case A1693.

White: Commissioner Crane, can I interject real briefly. Can we get a motion to postpone Case Z2786 until August 25, 2009?

Crane: I beg your pardon, quite right.

Shipley: I move that we postpone Z2786 until August 25th, 2009.

Bustos: I second.

Crane: Seconded by Mr. Bustos. I think we can do this by voice vote Mr. White? All in favor.

ALL COMMISSIONERS MEMBERS - AYE.

Crane: Opposed, passes four to nothing. That is postponed until August 25th. Thank you, Mr. White.

V. CONSENT AGENDA

1. **Case CP-09-01 - MOVED TO NEW BUSINESS #1.**

2. **Case S-09-012 - MOVED TO NEW BUSINESS #2**

3. **Case PUC-09-03:** A request for final site plan approval for La Paloma Subdivision located at the northwest intersection of Rinconada Boulevard and Settlers Pass. The subject properties encompass 11.683 +/- acres continuing 82 residential lots and one commercial lot of 1.698 +/- acres that are zoned PUD (Planned Unit Development). The development standards will follow the approved concept plan for La Paloma Subdivision. Submitted by Zia Engineering for Rinconada Development of Las Cruces.

4. **Case Z2793:** A request for a zone change from C-2 (Commercial Medium Intensity) to C-3 (Commercial High Intensity) for 4.31 +/- acres located at 1400 E. Missouri Avenue. The subject property is a shopping center (Solano Square) having multiple tenants. The zone change will bring the property into compliance with the 2001 Zoning Code, as amended for commercial properties exceeding the maximum acreage of one acre for properties zoned C-2 (Commercial Medium Intensity). Submitted by City and Regional Land Use Consultants for GADCO of El Paso, LLC>

5. **Case S-08-103:** A request for final plat approval for a development known as Mesa Village Tracts No. 2, Replat No. 1. The subject property consists of 2.34 +/- acres and is located at 6520 Peachtree Hills Road, east of Porter Drive, and south of Peachtree Hills Road and is zoned R-1a (Single-Family Medium Density). The proposed final plat will replat one lot of create a second lot. A waiver for no road improvements to Peachtree Hills Road was approved by City Council on June 22, 2009, through Resolution No. 09-317. Submitted by Southwest Engineering for Victor and Armida Ramirez.

6. **Case S-09-011 - MOVED TO NEW BUSINESS #3.**

7. **Case Z2785 - MOVED TO NEW BUSINESS #4.**

8. **Case S-09-027 - MOVED TO NEW BUSINESS #5.**

9. **Case A1693 - MOVED TO NEW BUSINESS #6.**

Crane: Next is our consent agenda which has presently nine items on it. And this is voted on as a package so to speak unless any member of the Commission or the public or the staff wishes to have one or more items on the consent agenda discussed. Sir.

Dawe: Good evening Commissioner, my name is Tom Dawe, I'm a lawyer and I represent Alameda Land Investment Company. And we request that Cases six and seven be removed from the consent agenda for discussion.

Crane: Give me that number again please.

Dawe: Yes, sir. Six and seven.

Crane: Six and seven on that list. Right which is...?

Dawe: S-09-011 and Z2785.

Crane: All right. We will put that as the first item of new business.

Dawe: Thank you.

Crane: Any other items to be removed from the consent agenda?

Shipley: Yes. Number one, number two.

Crane: Number one.

Shipley: Number one, number two.

Crane: CP-09-01 right.

Shipley: CP-09-01. Number two Case S-09-012. And also 09-27 and Z2794.

Crane: That would be eight and nine. So the first item of new business when we get to it will be S-09-011 and Z2785 as a pair. The next item of new business would be...

Rodriguez: Mr. Chairman.

Crane: Yes?

Rodriguez: Staff would recommend since based off of the cases that are coming off the consent agenda to be considered for new discussion, staff would recommend that we would hear them in order. So case number one on the consent agent that's coming off we will just hear them in order as we go down the agenda and then get into new business. That would be staff's recommendation.

Crane: Do you have any objection Mr. Dawe?

Dawe: No, sir.

Crane: Thank you. Very well then, the first item of new business and off the consent agenda will be CP-09-01, then S-09-012, then S-09-027, then Z2794, and finally S-09-011 and Z2785. Then we will get to the items already on the new business agenda.

Rodriguez: Mr. Chairman, if we can please have a motion to amend the agenda as noted please.

Shipley: I so move to amend the agenda as noted.

Bustos: I second.

Crane: Thank you Mr. Bustos. All in favor.

ALL COMMISSIONERS MEMBERS - AYE.

Crane: Opposed. That leaves us with three items on the consent agenda, PUD-09-03, Z2793, S-08-103. Is there any opposition to having those remain on the consent agenda? Commissioners.

Shipley: I move to accept item number three Case PUD-09-03, number four Case Z2793, and number five Case S-08-013.

Rodriguez: Mr. Chairman, I just wanted to let you know that there will not be... there is not a work session scheduled for the month of August. So the only meeting the Commission would be involved in would be your regular Tuesday meeting.

Crane: So it's almost a vacation month for us?

Rodriguez: Almost, yeah.

Crane: Thank you.

XI. ADJOURNMENT 9:59

Crane: We stand adjourned at 9:59. Thank you.

8/25/09

Chairperson

Attachment "C"

Vicinty Map

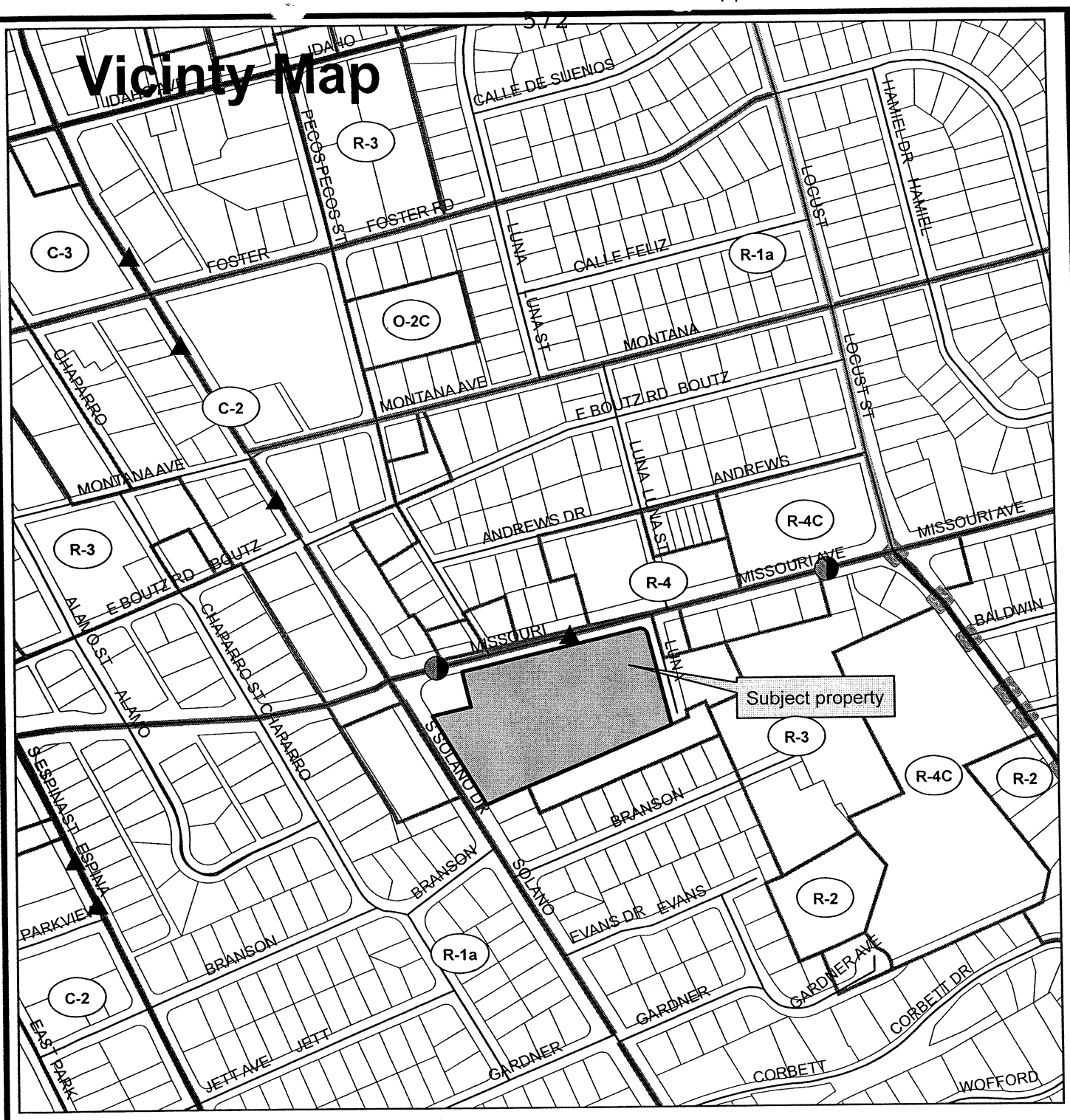

MAP CREATED FOR: JWHITE (Z2793)

ADDRESS: 1400 E. Missouri Avenue

OWNERS: GADCO

DATE: 7/22/2009 12:15:50 PM

ZONING: R-1a

0 120 240 480 720 960 Feet

N

Community Development Department
575 S Alameda Blvd.
Las Cruces, NM 88001
(505) 528-3222

This map was created by Community Development to assist in the administration of local zoning regulations. Neither the City of Las Cruces or the Community Development Department assumes any legal responsibilities for the information contained in this map. Users noting errors or omissions are encouraged to contact the Community Development Department at (505) 528-3043.